PIC DECADE FREQUENCY DIVIDER

outputs: 1 Hz, 10 Hz, 100 Hz, 1 kHz, 10 kHz

Frequency drift in 1 hour with PLE 26 MHz OCXO: about 1 ppb (1E-9)

PIC-based decade divider code by tvb (Tom Van Baak)
www.leapsecond.com/tools/PPSDIV.ASM
mods by Richard H McCorkle at TAPR www.tapr.org
26 MHz version by John Beale
www.bealecorner.org/best/measure/time/source/

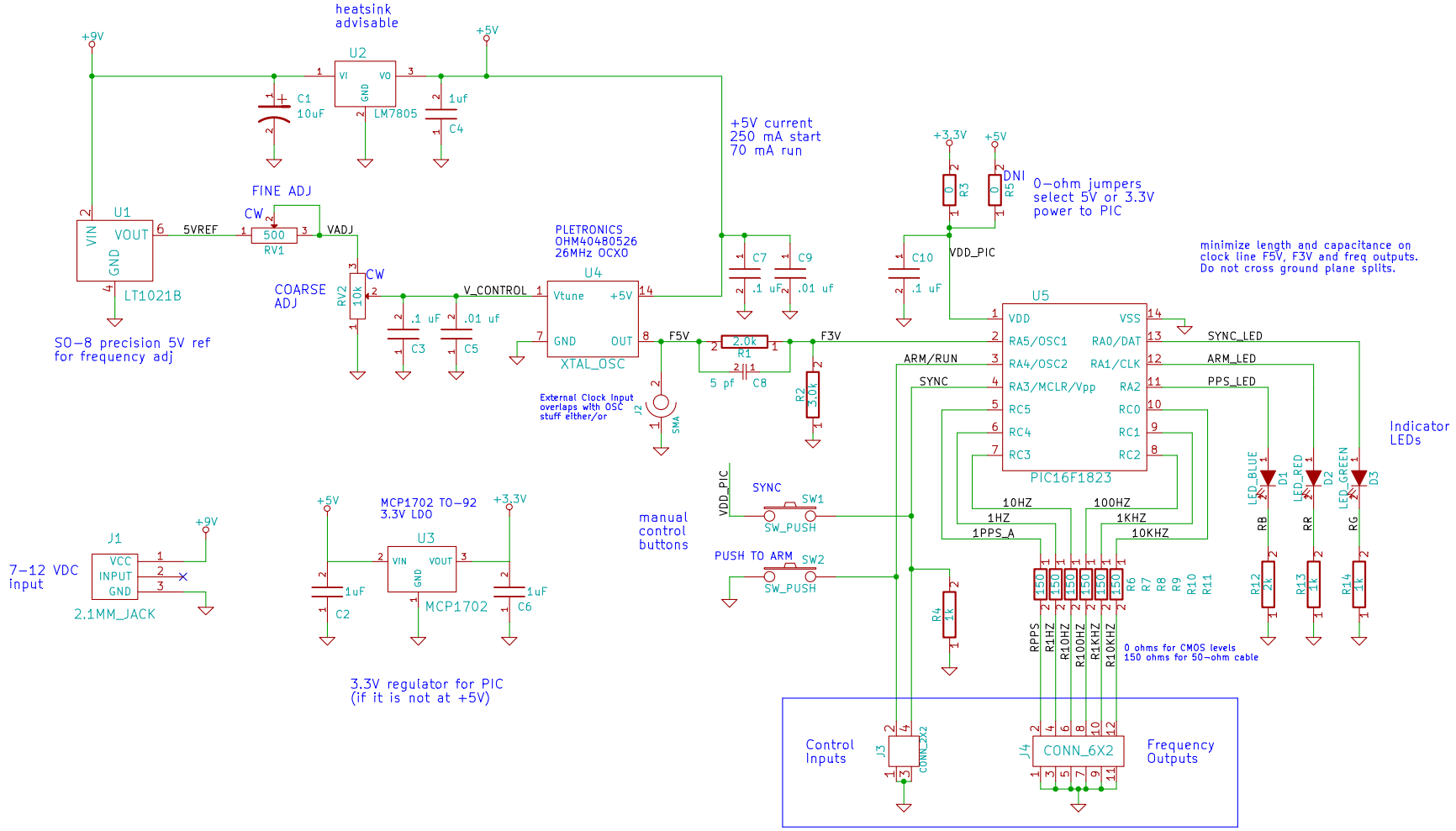

Beale Corner www.bealecorner.com		
File: 26MHz-OSC1.sch		
Sheet: /		
Title: Decade Frequency Generator		
Size: A4	Date: 17 oct 2011	**Rev: 01**
KiCad E.D.A. eeschema (2011-07-08 BZR 3044)-stable		Id: 1/1